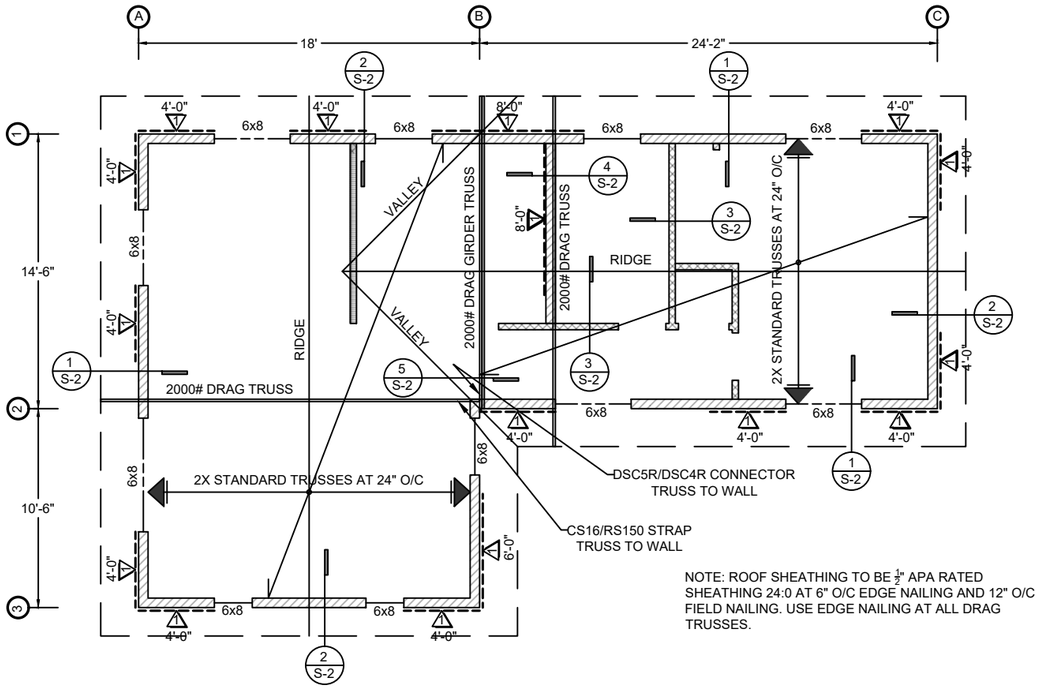

NOTE: ROOF SHEATHING TO BE $\frac{1}{2}$" APA RATED SHEATHING 24:0 AT 6" O/C EDGE NAILING AND 12" O/C FIELD NAILING. USE EDGE NAILING AT ALL DRAG TRUSSES.

LEGEND

(#) BRACED WALL LINE

WOOD STRUCTURAL PANEL SHEATHING							
MARK	MINIMUM NAIL		MINIMUM WOOD STRUCTURAL PANEL SPAN RATING	MINIMUM NOMUNAL PANEL THICKNESS (in)	MAXIMUM WALL STUD SPACING (in)	PANEL NAIL SPACING	
	SIZE	PENETRATION (in)				EDGES (inches o/c)	FIELD (inches o/c)
1	6D COMMON	1.5	24:0	$\frac{3}{8}$"	16	6	12
	8D COMMON	1.75	24:16	$\frac{7}{16}$"	16	6	12

WOOD STRUCTURAL PANELS SHALL CONFORM TO DOC PS 1, DOC PS 2 OR ANSI/APA PRP 210, CSA O437 OR CSA O325. PANELS SHALL BE IDENTIFIED BY A GRADE MARK OR CERTIFICATE OF INSPECTION ISSUED BY AN APPROVED AGENCY

VERTICAL JOINTS OF PANEL SHEATHING SHALL OCCUR OVER AND BE FASTENED TO COMMON STUDS. HORIZONTAL JOINTS IN BRACED WALL PANELS SHALL OCCUR OVER AND BE FASTENED TO COMMON BLOCKING OF A MINIMUM 1 $\frac{1}{2}$ INCH THICKNESS.

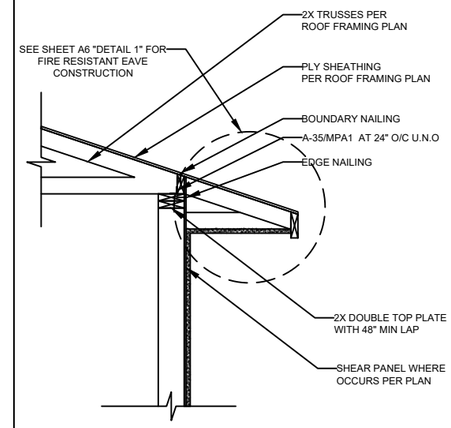

DETAIL 1
(NTS)

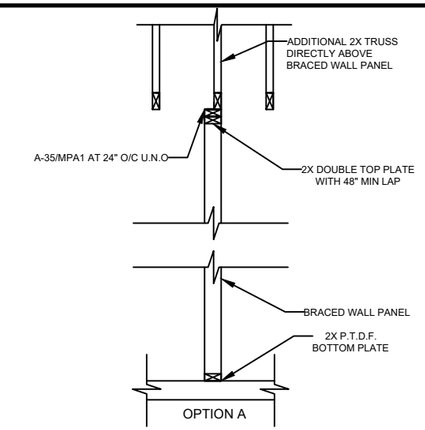

BRACED WALL PANEL CONNECTION WHEN PARALLEL TO CEILING FRAMING

DETAIL 4
(NTS)

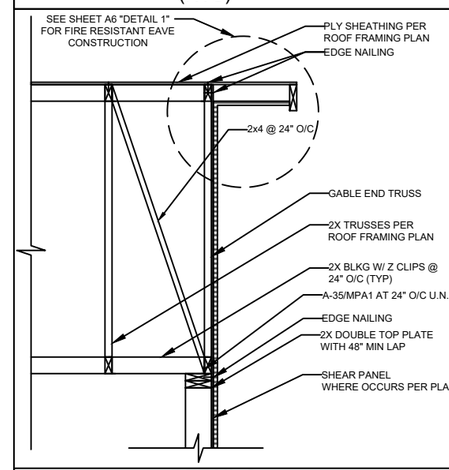

DETAIL 2
(NTS)

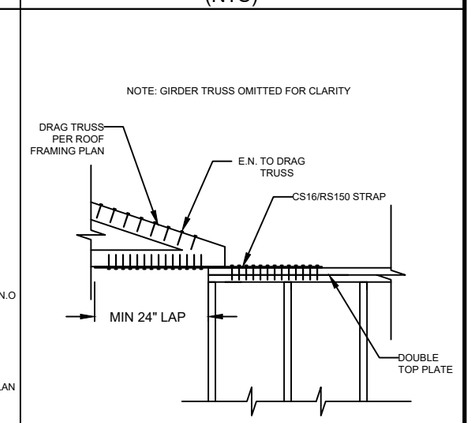

DETAIL 5
(NTS)

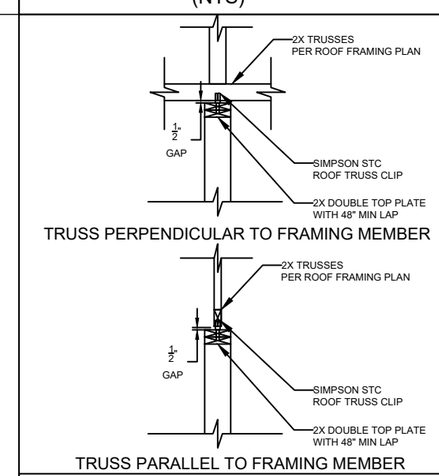

DETAIL 3
(NTS)

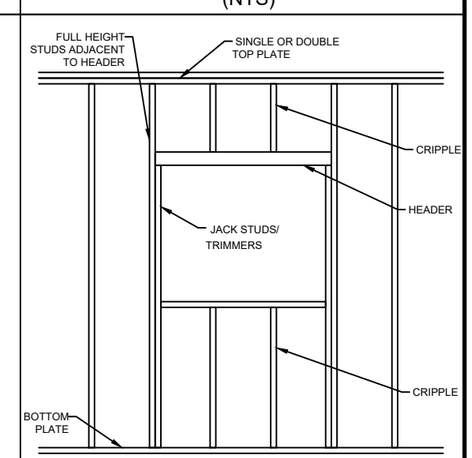

DETAIL 6
(NTS)

ROOF FRAMING PLAN
1/8" = 1'-0"

NO CHANGES ALLOWED TO THIS DESIGN

PDS 672 (REV. 01/01/2020)

By using these standard plans, the user agrees to release the County of Tulare from any and all claims, liabilities, suits, and demands on account of any injury, damage, or loss to persons or property, including injury or death, or economic losses, arising out of the use of these construction documents. The use of these plans does not eliminate or reduce the user's responsibility to verify any and all information.

County of Tulare, Economic Development
800 (L) SF ACCESSORY DWELLING UNIT
BUILDING DIVISION

Sheet Number

S2

A. General

Applicable codes. All projects shall comply with the *2022 California Building Code* (CBC) *and/or California Residential Code* (CRC)*, 2022 California Green Building Standards Code* (CalGreen), *2022 California Electrical Code* (CEC), 2022 *California Mechanical Code* (CMC), 2022 *California Plumbing Code* (CPC), 2022 *California Fire Code* (CFC), 2022 *California Building Energy Efficiency Standards* (CBEES), and all County of Tulare amendments.

A. Electrical, Plumbing, and Mechanical

1. **Exterior lighting.** All projects shall comply with the County of Tulare lighting ordinance.
2. **GFCI outlets.** Ground Fault Circuit Interrupter (GFCI) outlets are required in bathrooms, at kitchen countertops, at laundry and wet bar sinks, in garages, in crawlspaces, in unfinished basements, and outdoors. (CEC 210.8)
3. **AFCI outlets.** Electrical circuits in bedrooms, living rooms, dining rooms, dens, closets, hallways, or similar rooms must be protected by Arc Fault Circuit Interrupters (AFCI). (CEC 210.12)
4. **Luminaire requirements.** Installed luminaires shall meet the efficacy and fixture requirements of CBEES 150.0(k).
5. **Smoke detectors in building remodels**. Smoke detectors are required in each existing sleeping room, outside each separate sleeping area in the immediate vicinity of sleeping rooms, and on each story of a dwelling including basements. Battery-operated detectors are acceptable in existing areas with no construction taking place and in alterations not resulting in removal of interior wall or ceiling finishes and without access via an attic, crawl space, or basement. (CRC R314.3)
6. **Carbon monoxide detectors in building remodels**. Carbon monoxide detectors are required outside each separate sleeping area in the immediate vicinity of sleeping rooms and on each story of a dwelling including basements. Battery-operated detectors are acceptable in existing areas with no construction taking place and in alterations not resulting in removal of interior wall or ceiling finishes and without access via an attic, crawl space, or basement. (CRC R315.3)
7. **Water heater seismic strapping.** Minimum two 3/4-inch-by-24-gauge straps required around water heaters, with 1/4-inch-by-3-inch lag bolts attached directly to framing. Straps shall be at points within upper third and lower third of water heater vertical dimension. Lower connection shall occur minimum 4 inches above controls. (CPC 507.2)
8. **Gas appliances in garages.** Water heaters and heating/cooling equipment capable of igniting flammable vapors shall be placed on minimum 18-inch-high platform unless listing report number provided showing ignition-resistant appliance. (CPC 507.13 and CMC 305.1)
9. **Impact protection of appliances.** Water heaters and heating/cooling equipment subject to vehicular impact shall be protected by bollards or an equivalent measure. (CPC 507.13.1 and CMC 305.11)
10. **Water closet clearance.** Minimum 30-inch-wide by 24-inch-deep clearance required at front of water closets. (CPC 402.5)
11. **Shower size.** Shower compartments shall have minimum area of 1024 square inches and be able to encompass a 30-inch-diameter circle. Shower doors shall have a minimum 22-inch unobstructed width. (CPC 408.5 and CPC 408.6)
12. **Fireplace appliances.** Fireplaces with gas appliances are required to have the flue damper permanently fixed in the open position and fireplaces with LPG appliances are to have no 'pit' or 'sump' configurations. (CMC 303.7.1)
13. **Chimney clearance.** Minimum 2-foot chimney clearance required above building within 10-foot horizontally of chimney. The chimney shall extend minimum 3 feet above highest point where chimney passes through roof. (CRC R1003.9)

14. Mechanical Ventilation and Indoor Air Quality (ASHRAE 62.2-2010)

1. **Transfer air.** Ventilation air shall be provided directly from the outdoors and not as transfer air from adjacent dwelling units or other spaces, such as garages, unconditioned crawlspaces, or unconditioned attics. (CBEES 150.0(o))
2. **Instructions and labeling.** Ventilation system controls shall be labeled and the home owner shall be provided with instructions on how to operate the system. (CBEES 150.0(o))
3. **Combustion and solid-fuel burning appliances.** Combustion appliances shall be properly vented and air systems shall be designed to prevent back drafting. (CBEES 150.0(o))
4. **Garages.** The wall and openings between occupiable spaces and the garage shall be sealed. HVAC systems that include air handlers or return ducts located in garages shall have total air leakage of no more than 6% of total fan flow when measured at 0.1 in. w.c. using California Title 24 or equivalents. (CBEES 150.0(o))
5. **Minimum filtration.** Mechanical systems supplying air to occupiable space through ductwork shall be provided with a filter having a minimum efficiency of MERV 6 or better. (CBEES 150.0(o))
6. **Air inlets.** Air inlets (not exhaust) shall be located away from known contaminants. (CBEES 150.0(o))
7. **Air moving equipment.** Air moving equipment used to meet either the whole-building ventilation requirement or the local ventilation exhaust requirement shall be rated in terms of airflow and sound. (CBEES 150.0(o))
   - **a.** All continuously operating fans shall be rated at a maximum of 1.0 sone.
   - **b.** Intermittently operated whole-building ventilation fans shall be rated at a maximum of 1.0 sone.
   - **c.** Intermittently operated local exhaust fans shall be rated at maximum of 3.0 sone.
   - **d.** Remotely located air-moving equipment (mounted outside of habitable spaces) need not meet sound requirements if at least 4 feet of ductwork between fan and intake grill.

8. Foundation and Underfloor

1. **Foundation reinforcement.** Continuous footings and stem walls shall be provided with a minimum two longitudinal No. 4 bars, one at the top and one at the bottom of the footing. (CRC R403.1.3.3)
2. **Shear wall foundation support.** Shear walls shall be supported by continuous foundations. (CRC 403.1.2)
3. **Concrete slabs-on-grade.** Slabs-on-grade shall be minimum 3-1/2-inches thick. (CRC R506.1)
4. **Vapor retarder.** A 6-mil polyethylene or approved vapor retarder with joints lapped minimum 6 inches shall be placed between a concrete slab-on-grade and the base course or subgrade. (CRC 506.2.3)
5. **Anchor bolts and sills.** Foundation plates or sills shall be bolted or anchored to the foundation or foundation wall per the following (CRC R403.1.6 and CRC R602.11.1):
   - **a.** Minimum 1/2-inch-diameter steel bolts
   - **b.** Bolts embedded at least 7 inches into concrete or masonry
   - **c.** Bolts spaced maximum 6 feet on center
   - **d.** Minimum two bolts per plate/sill piece with one bolt located maximum 12 inches and minimum 7 bolt diameters from each end of each sill plate/piece
   - **e.** Minimum 3-inch by 3-inch by 0.299-inch steel plate washer between sill and nut on each bolt
6. **Hold-downs.** All hold-downs must be tied in place prior to foundation inspection.
7. **Protection of wood against decay**. Naturally durable or preservative-treated wood shall be provided in the following locations (CRC R317.1):
   - **a.** All wood in contact with ground, embedded in concrete in direct contact with ground, or embedded in concrete exposed to weather
   - **b.** Wood joists within 18 inches and wood girders within 12 inches of the exposed ground in crawl spaces shall be of naturally durable or preservative-treated wood
   - **c.** Wood framing members that rest on concrete or masonry exterior foundation walls and are less than 8 inches from exposed earth shall be of naturally durable or preservative-treated wood
   - **d.** Wood framing, sheathing, and siding on the exterior of the building and having clearance less than 6 inches from the exposed ground or less than 2 inches vertically from concrete steps, porch slabs, patio slabs, and similar horizontal surface exposed to weather
   - **e.** Sills and sleepers on concrete or masonry slab in direct contact with ground unless separated from such slab by impervious moisture barrier

D. Foundation and Underfloor (Continued)

- **f.** Ends of wood girders entering masonry or concrete walls with clearances less than 1/2 inch on tops, sides, and ends
- **g.** Wood structural members supporting moisture-permeable floors or roofs exposed to weather, such as concrete or masonry slabs, unless separated from such floors or roofs by an impervious moisture barrier
- **h.** Wood furring strips or other wood framing members attached directly to interior of exterior concrete or masonry walls below grade except where vapor retarder applied between wall and furring strips or framing members

8. **Underfloor ventilation.** Underfloor areas shall have ventilation openings through foundation walls or exterior walls, with minimum net area of ventilation openings of 1 square foot for each 150 square feet of underfloor area. On such ventilating opening shall be within 3 feet of each corner of the building. (CRC R408.1)
9. **Underfloor access.** Underfloor areas shall be provided with a minimum 18-inch by 24-inch access opening. (CRC R408.4)

E. Wood Framing

1. **Fastener requirements.** The number, size, and spacing of fasteners connecting wood members/elements shall not be less than that set forth in CRC Table R602.3(1). (CRC R502.9, CRC R602.3, and CRC R802.2)
2. **Stud size, height, and spacing.** The size, height, and spacing of studs shall be in accordance with CRC Table R602.3(5). (CRC R602.3.1)
3. **Sill plate.** Studs shall have full bearing on nominal 2-inch thick or larger sill plate with width at least equal to stud width. (CRC R602.3.4)
4. **Bearing studs.** Where joists, trusses, or rafters are spaced more than 16 inches on center and the bearing studs below are spaced 24 inches on center, such members shall bear within 5 inches of the studs beneath. (CRC R602.3.3)
5. **Drilling and notching of studs.** Any stud in an exterior wall or bearing partition may be cut or notched to a depth not exceeding 25% of its width. Studs in nonbearing partitions may be notched to a depth not to exceed 40% of a single stud width. Any stud may be bored or drilled, provided the diameter of the resulting hole is no more than 60% of the stud width, the edge of the hole is no more than 5/8 inch to the edge of the stud, and the hole is not located in the same section as a cut or notch. Studs located in exterior wall or bearing partitions drilled over 40% and up to 60% shall also be doubled with no more than two successive studs bored. (CRC R602.6)
6. **Top plate.** Wood stud walls shall be capped with a double top plate installed to provide overlapping at corners and at intersections with other partitions. End joints in double top plates shall be offset at least 24 inches. Joints in plates need not occur over studs. Plates shall be minimum nominal 2 inches thick and have width at least equal to width of studs. (CRC R602.3.2)
7. **Top plate splices.** Top plate lap splices shall be face-nailed with minimum 8 16d nails on each side of splice. (CRC R602.10.8.1)
8. **Drilling and notching of top plate.** When piping or ductwork is placed in or partly in an exterior wall or interior load-bearing wall, necessitating cutting, drilling, or notching of the top plate by more than 50% of its width, a galvanized metal tie not less than 0.054-inch thick and 1-1/2-inches wide shall be fastened across and to the plate at each side of the opening with not less than 8 10d nails having a minimum length of 1-1/2 inches at each side or equivalent. The metal tie must extend minimum 6 inches past the opening. (CRC R602.6.1)
9. **Cripple walls.** Foundation cripple walls shall be framed of studs not less in size than the studding above. Cripple walls more than 4 feet in height shall have studs sized as required for an additional story. Cripple walls with stud height less than 14 inches shall be sheathed on at least one side with a wood structural panel fastened to both the top and bottom plates in accordance with Table R602.3(1), or the cripple walls shall be constructed of solid blocking. Cripple walls shall be supported on continuous foundations. (CRC R602.9)
10. **Wall bracing.** Buildings shall be braced in accordance with the methods allowed per CRC R602.10.2, CRC R602.10.4, and/or CRC R602.10.5.
11. **Braced wall line spacing.** Spacing between braced wall lines shall not exceed 20 feet or alternate provisions of CRC R602.10.1.3.
12. **Shear wall cumulative length.** The cumulative length of shear walls within each braced wall line shall meet the provisions of CRC Table R602.10.3(1) for wind loads and CRC Table R602.10.3(2) for seismic loads. (CRC R602.10.1.1)
13. **Shear wall spacing.** Shear walls shall be located not more than 25 feet on center. (CRC R602.10.2.2)
14. **Shear wall offset.** Shear walls may be offset out-of-plan not more than 4 feet from the designated braced wall line and not more than 8 feet from any other offset wall considered part of the same braced wall line. (CRC R602.10.1.2)
15. **Shear wall location.** Shear walls shall be located at the ends of each braced wall line or meet the alternate provisions of CRC R602.10.2.2.
16. **Individual shear wall length.** Shear walls shall meet minimum length requirements of CRC R602.10.6.5.1.
17. **Cripple wall bracing.** Cripple walls shall be braced per CRC R602.10.11.
18. **Shear wall and diaphragm nailing.** All shear walls, roof diaphragms, and floor diaphragms shall be nailed to supporting construction per CRC Table R602.3(1). (CRC R604.3)
19. **Shear wall joints.** All vertical joints in shear wall sheathing shall occur over, and be fastened to, common studs. Horizontal joints in shear walls shall occur over, and be fastened to, minimum 1-1/2-inch-thick blocking. (CRC R602.10.10)
20. **Framing over openings.** Headers, double joists, or trusses of adequate size to transfer loads to vertical members shall be provided over window and door openings in load-bearing walls and partitions. (CBC 2304.3.2)
21. **Joists under bearing partitions.** Joists under parallel bearing partitions shall be of adequate size to support the load. Double joists, sized to adequately support the load, that are separated to permit the installation of piping or vents shall be full-depth solid-blocked with minimum 2-inch nominal lumber spaced at maximum 4 feet on center. Bearing partitions perpendicular to joists shall not be offset from supporting girders, walls, or partitions more than the joist depth unless such joists are of sufficient size to carry the additional load. (CRC R502.4)
22. **Joists above or below shear walls.** Where joists are perpendicular to a shear wall above or below, a rim joist, band joist, or blocking shall be provided along the entire length of the shear wall. Where joists are parallel to a shear wall above or below, a rim joist, end joist, or other parallel framing shall be provided directly above and/or below the shear wall. Where a parallel framing member cannot be located directly above and/or below the shear wall, full-depth blocking at 16-inch spacing shall be provided between the parallel framing members to each side of the shear wall. (CRC R602.10.8)
23. **Floor member bearing.** The ends of each floor joist, beam, or girder shall have minimum 1-1/2 inches of bearing on wood or metal and minimum 3 inches of bearing on masonry or concrete except where supported on a 1-inch-by-4-inch ribbon strip and nailed to the adjoining stud or by the use of approved joist hangers. (CRC R502.6)
24. **Floor joist lap.** Floor joists framing opposite sides over a bearing support shall lap minimum 3 inches and shall be nailed together within minimum 3 10d face nails. A wood or metal splice with strength equal to or greater than that provided by the lap is permitted. (CRC R502.6.1)
25. **Floor joist-to-girder support.** Floor joists framing into the side of a wood girder shall be supported by approved framing anchors or on ledger strips minimum nominal 2 inches by 2 inches. (CRC R502.6.2)
26. **Floor joist lateral restraint.** Floor joists shall be supported laterally at ends and each intermediate support by minimum 2-inch full-depth blocking, by attachment to full-depth header, band joist, or rim joist, to an adjoining stud, or shall be otherwise provided with lateral support to prevent rotation. (CRC R502.7)
27. **Floor joist bridging.** Floor joists exceeding nominal 2 inches by 12 inches shall be supported laterally by solid blocking, diagonal bridging (wood or metal), or a continuous 1-inch-by-3-inch strip nailed across the bottom of joists perpendicular to joists at maximum 8-foot intervals. (CRC R502.7.1)
28. **Framing of floor openings.** Openings in floor framing shall be framed with a header and trimmer joists. When the header joist span does not exceed 4 feet, the header joist may be a single member the same size as the floor joist. Single trimmer joists may be used to carry a single header joist located within 3 feet of the trimmer joist bearing. When the header joist span exceeds 4 feet, the trimmer joists and header joist shall be doubled and of sufficient cross section to support the floor joists framing into the header. Approved hangers shall be used for the header-joist-to-trimmer-joist connections when the header joist span exceeds 6 feet. Tail joists over 12 feet long shall be supported at the header by framing anchors or on ledger strips minimum 2 inches by 2 inches. (CRC R502.10)

E. Wood Framing (Continued)

29. **Girders.** Girders for single-story construction or girders supporting loads from a single floor shall not be less than 4 inches by 6 inches for spans 6 feet or less, provided that girders are spaced not more than 8 feet on center. Other girders shall be designed to support the loads specified in the CBC. Girder end joints shall occur over supports. When a girder is spliced over a support, an adequate tie shall be provided. The ends of beams or girders supported on masonry or concrete shall not have less than 3 inches of bearing. (CBC 2308.7)
30. **Ridges, hips, and valleys**. Rafters shall be framed to a ridge board or to each other with a gusset plate as a tie. Ridge boards shall be minimum 1-inch nominal thickness and not less in depth than the cut end of the rafter. At all valley and hips, there shall be a valley or hip rafter not less than 2-inch nominal thickness and not less in depth than the cut end of the rafter. Hip and valley rafters shall be supported at the ridge by a brace to a bearing partition or be designed to carry and distribute the specific load at that point. Where the roof pitch is less than 3:12 slope (25% gradient), structural members that support rafters and ceilings joists, such as ridges, hips, and valleys, shall be designed as beams. (CRC R802.3)
31. **Ceiling joist and rafter connections.** Ceiling joists and rafters shall be nailed to each other per CRC Table R802.5.1(9), and the rafter shall be nailed to the wall top plate per CRC Table R602.3(1). Ceiling joists shall be continuous or securely joined per CRC Table R802.5.1(9) where they meet over interior partitions and are nailed to adjacent rafters to provide a continuous tie across the building when such joists are parallel to rafters. Where ceiling joists are not connected to the rafters at the wall top plate, joists connected higher in the attic shall be installed as rafter ties, or rafter ties shall be installed to provide a continuous tie. Where ceiling joists are not parallel to rafters, rafter ties shall be installed. Rafter ties shall be minimum 2 inches by 4 inches nominal, installed per CRC Table R802.5.1(9), or connections of equivalent capacities shall be provided. Where ceilings joists or rafter ties are not provided, the ridge formed by these rafters shall be supported by a wall or engineer-designed girder. (CRC R802.3.1)
32. **Ceiling joists lapped.** Ends of ceiling joists shall be lapped minimum 3 inches or butted over bearing partitions or beams and toenailed to the bearing element. Where ceiling joists provide resistance to rafter thrust, lapped joists shall be nailed together per CRC Table R602.3(1) and butted joists shall be tied together in a manner to resist such thrust. (CRC R802.3.2)
33. **Collar ties.** Collar ties or ridge straps to resist wind uplift shall be connected in the upper third of the attic space. Collar ties shall be a minimum 1 inch by 4 inches nominal and spaced at maximum 4 feet on center. (CRC R802.3.1)
34. **Purlins.** Purlins installed to reduce the span of rafters shall be sized not less than the required size of the rafters they support. Purlins shall be continuous and shall be supported by 2-inch-by-4-inch nominal braces installed to bearing walls at a minimum 45-degree slope from horizontal. The braces shall be spaced maximum 4 feet on center with a maximum 8-foot unbraced length. (CRC R802.5.1)
35. **Roof/ceiling member bearing.** The ends of each rafter or ceiling joist shall have not less than 1-1/2 inches of bearing on wood or metal and not less than 3 inches of bearing on masonry or concrete. (CRC R802.6)
36. **Roof/ceiling member lateral support.** Roof framing members and ceiling joists with a nominal depth-to-thickness ratio exceeding 5:1 shall be provided with lateral support at points of bearing to prevent rotation. (CRC R802.8)
37. **Roof/ceiling bridging.** Rafters and ceiling joists with a nominal depth-to-thickness ratio exceeding 6:1 shall be supported laterally by solid blocking, diagonal bridging (wood or metal), or a continuous 1-inch-by-3-inch wood strip nailed across the rafters or ceiling joists at maximum 8-foot intervals. (CRC R802.8.1)
38. **Framing of roof/ceiling openings.** Openings in roof and ceiling framing shall be framed with a header and trimmer joists. When the header joist span does not exceed 4 feet, the header joist may be a single member the same size as the ceiling joist or rafter. Single trimmer joists may be used to carry a single header joist located within 3 feet of the trimmer joist bearing. When the header joist span exceeds 4 feet, the trimmer joists and header joist shall be doubled and of sufficient cross section to support the ceiling joists or rafters framing into the header. Approved hangers shall be used for the header-joist-to-trimmer-joist connections when the header joist span exceeds 6 feet. Tail joists over 12 feet long shall be supported at the header by framing anchors or on ledger strips minimum 2 inches by 2 inches. (CRC R502.10)
39. **Roof framing above shear walls.** Rafters or roof trusses shall be connected to top plates of shear walls with blocking between the rafters or trusses. (CRC R602.10.8)
40. **Roof diaphragm under fill framing.** Roof plywood shall be continuous under California fill framing.
41. **Roof diaphragm at ridges.** Minimum 2-inch nominal blocking required for roof diaphragm nailing at ridges.
42. **Blocking of roof trusses.** Minimum 2-inch nominal blocking required between trusses at ridge lines and at points of bearing at exterior walls.
43. **Truss clearance**. Minimum 1/2-inch clearance required between top plates of interior non-bearing partitions and bottom chords of trusses.
44. **Drilling, cutting, and notching of roof/floor framing.** Notches in solid lumber joists, rafters, blocking, and beams shall not exceed one-sixth the member depth, shall be not longer than one-third the member depth, and shall not be located in the middle one-third of the span. Notches at member ends shall not exceed one-fourth the member depth. The tension side of members 4 inches or greater in nominal thickness shall not be notched except at member ends. The diameter of holes bored or cut into members shall not exceed one-third the member depth. Holes shall not be closer than 2 inches to the top or bottom of the member or to any other hole located in the member. Where the member is also notched, the hole shall not be closer than 2 inches to the notch. (CRC R502.8.1)
45. **Exterior landings, decks, balconies, and stairs.** Such elements shall be positively anchored to the primary structure to resist both vertical and lateral forces or shall be designed to be self-supporting. Attachment shall not be accomplished by use of toenails or nails subject to withdrawal. (CRC R311.3)
46. **Fireblocking.** Fireblocking shall be provided in the following locations (CRC R302.11 and CRC R1003.19):
    - **a.** In concealed spaces of stud walls and partitions, including furred spaces, and parallel rows of studs or staggered studs, as follows:
      - **i.** Vertically at the ceiling and floor levels
      - **ii.** Horizontally at intervals not exceeding 10 feet
    - **b.** At all interconnections between concealed vertical and horizontal spaces such as occur at soffits, drop ceilings, and cove ceilings
    - **c.** In concealed spaces between stair stringers at the top and bottom of the run
    - **d.** At openings around vents, pipes, ducts, cables and wires at ceiling and floor level, with an approved material to resist the free passage of flame and products of combustion
    - **e.** At chimneys and fireplaces per item E.49
    - **f.** Cornices of a two-family dwelling at the line of dwelling-unit separation
47. **Fireblocking materials.** Except as otherwise specified in items E.48 and E.49, fireblocking shall consist of the following materials with the integrity maintained (CRC R302.11.1):
    - **a.** Two-inch nominal lumber
    - **b.** Two thicknesses of one-inch nominal lumber with broken lap joints
    - **c.** One thickness of 23/32-inch wood structural panel with joints backed by 23/32-inch wood structural panel
    - **d.** One thickness of 3/4-inch particleboard with joints backed by 3/4-inch particleboard
    - **e.** 1/2-inch gypsum board
    - **f.** 1/4-inch cement-based millboard
    - **g.** Batts or blankets of mineral or glass fiber of other approved materials installed in such a manner as to be securely retained in place. Batts or blankets of mineral or glass fiber or other approved non-rigid materials shall be permitted for compliance with the 10-foot horizontal fireblocking in walls constructed using parallel rows of studs or staggered studs. Unfaced fiberglass batt insulation used as fireblocking shall fill the entire cross-section of the wall cavity to a minimum height of 16 inches measured vertically. When piping, conduit, or similar obstructions are encountered, the insulation shall be packed tightly around the obstruction. Loose-fill insulation material shall not be used as a fireblock unless specifically tested in the form and manner intended for use to demonstrate its ability to remain in place and to retard the spread of fire and hot gases.
48. **Fireblocking at openings around vents, pipes, ducts, cables, and wires at ceiling and floor level.** Such openings shall be fireblocked with an approved material to resist the free passage of flame and products of combustion. (CRC R302.11)

E. Wood Framing (Continued)

49. **Fireblocking of chimneys and fireplaces.** All spaces between chimneys and floors and ceilings through which chimneys pass shall be fireblocked with noncombustible material securely fastened in place. The fireblocking of spaces between chimneys and wood joists, beams, or headers shall be self-supporting or be placed on strips of metal or metal lath laid across the spaces between combustible material and the chimney. (CRC R1003.19)
50. **Draftstopping.** In combustible construction where there is usable space both above and below the concealed space of a floor/ceiling assembly, draftstops shall be installed so that the area of the concealed space does not exceed 1000 square feet. Draftstopping shall divide the concealed space into approximately equal areas. Where the assembly is enclosed by a floor membrane above and a ceiling membrane below, draftstopping shall be provided in floor/ceiling assemblies under the following circumstances (CRC R302.12):
    - **a.** Ceiling is suspended under the floor framing
    - **b.** Floor framing is constructed of truss-type open-web or perforated members
51. **Draftstopping materials.** Draftstopping shall not be less than 1/2-inch gypsum board, 3/8-inch wood structural panels, or other approved materials adequately supported. Draftstopping shall be installed parallel to the floor framing members unless otherwise approved by the building official. The integrity of draftstops shall be maintained. (CRC R302.12.1)
52. **Combustible insulation clearance.** Combustible insulation shall be separated minimum 3 inches from recessed luminaires, fan motors, and other heat-producing devices. (CRC R302.14)

F. General Material Specifications

1. **Lumber.** All joists, rafters, beams, and posts 2-inches to 4-inches thick shall be No. 2 grade Douglas Fir-Larch or better. All posts and beams 5 inches and thicker shall be No. 1 grade Douglas Fir-Larch or better. Studs not more than 8 feet long shall be stud-grade Douglas Fir-Larch or better when supporting not more than one floor, roof, and ceiling. Studs longer than 8 feet shall be No. 2 grade Douglas Fir-Larch or better.
2. **Concrete.** Concrete shall have a minimum compressive strength of 2,500 psi at 28 days and shall consist of 1 part cement, 3 parts sand, 4 parts 1-inch maximum size rock, and not more than 7-1/2 gallons of water per sack of cement. (CRC R402.2)
3. **Mortar.** Mortar used in construction of masonry walls, foundation walls, and retaining walls shall conform to ASTM C 270 and shall consist of 1 part portland cement, 2-1/4 to 3 parts sand, and 1/4 to 1/2 part hydrated lime. (CBC 2103.2)
4. **Grout.** Grout shall conform to ASTM C 476 and shall consist of 1 part portland cement, 1/10 part hydrated lime, 2-1/4 to 3 parts sand, and 1 to 2 parts gravel. Grout shall attain a minimum compressive strength of 2,000 psi at 28 days. (CBC 2103.3)
5. **Masonry.** Masonry units shall comply with ASTM C 90 for load-bearing concrete masonry units. (CBC 2103.1)
6. **Reinforcing steel.** Reinforcing steel used in construction of reinforced masonry or concrete structures shall be deformed and comply with ASTM A 615. (CBC 2103.4)
7. **Structural steel.** Steel used as structural shapes such as wide-flange sections, channels, plates, and angles shall comply with ASTM A36. Pipe columns shall comply with ASTM A53. Structural tubes shall comply with ASTM A500, Grade B.
8. **Fasteners for preservative-treated wood.** Fasteners for preservative-treated and fire-retardant-treated wood - including nuts and washers -- shall be of hot dipped zinc-coated galvanized steel, stainless steel, silicon bronze, or copper. (CRC R317.3.1)

   Exception: 1/2-inch diameter or greater steel bolts

   Exception: Fasteners other than nails and timber rivets may be of mechanically deposited zinc-coated steel with coating weights in accordance with ASTM B 695, Class 55 minimum

   Exception: Plain carbon steel fasteners acceptable in SBX/DOT and zinc borate preservative-treated wood in an interior, dry environment
9. **Fasteners for fire-retardant-treated wood.** Fasteners for fire-retardant-treated wood used in exterior applications or wet or damp locations shall be of hot dipped zinc-coated galvanized steel, stainless steel, silicon bronze, or copper. (CRC R317.3.3)

G. Roofing and Weatherproofing

1. **Roof covering.** All roof covering shall be installed per applicable requirements of CBC 1507. Roof coverings shall be at least Class A rated in accordance with ASTM E 108 or UL 790, which shall include coverings of slate, clay or concrete roof tile, exposed concrete roof deck, ferrous or copper shingles or sheets. (County Building Code 92.1.1505.1)
2. **Roof flashing.** Flashing shall be installed at wall and roof intersections, at gutters, wherever there is a change in roof slope or direction, and around roof openings. Where flashing is of metal, the metal shall be corrosion-resistant with a thickness of not less than 0.019 inch (No. 26 galvanized sheet). (CRC R903.2.1)
3. **Crickets and saddles.** A cricket or saddle shall be installed on the ridge side of any chimney or penetration more than 30 inches wide as measured perpendicular to the slope. Cricket or saddle covering shall be sheet metal or the same material as the roof covering. (CRC R903.2.2)
4. **Water-resistive barrier.** A minimum of one layer of No. 15 asphalt felt shall be attached to studs or sheathing of all exterior walls. Such felt or material shall be applied horizontally, with the upper layer lapped over the lower layer minimum 2 inches. Where joints occur, felt shall be lapped minimum 6 inches. The felt shall be continuous to the top of walls and terminated at penetrations and building appendages in a manner to maintain a weather-resistant exterior wall envelope. (CRC R703.2)
5. **Wall flashing.** Approved corrosion-resistant flashing shall be applied shingle fashion at the following locations to prevent entry of water into the wall cavity or penetration of water to the building structural framing components (CRC R703.8):
   - **a.** Exterior door and window openings, extending to the surface of the exterior wall finish or to the water-resistive barrier for subsequent drainage
   - **b.** At the intersection of chimneys or other masonry construction with frame or stucco walls, with projecting lips on both sides under stucco copings
   - **c.** Under and at the ends of masonry, wood, or metal copings and sills
   - **d.** Continuously above all projecting wood trim
   - **e.** Where exterior porches, decks, or stairs attach to a wall or floor assembly of wood-frame construction
   - **f.** At wall and roof intersections
   - **g.** At built-in gutters
6. **Dampproofing.** Dampproofing materials for foundation walls enclosing usable space below grade shall be installed on the exterior surface of the wall, and shall extend from the top of the footing to finished grade. (CRC R406.1)
7. **Weep screed.** A minimum 0.019-inch (No. 26 galvanized sheet gage), corrosion-resistant weep screed or plastic weep screed with a minimum vertical attachment flange of 3-1/2 inches shall be provided at or below the foundation plate line on exterior stud walls in accordance with ASTM C 92. The weep screed shall be placed a minimum 4 inches above the earth or 2 inches above paved areas and shall be of a type allowing trapped water to drain to the exterior of the building. (CRC R703.7.2.1)

H. Grading and soils

1. **Grading permit**. Grading permit required if volume of earth moved exceeds 200 cubic yards or if any cuts or fills exceed 8 feet in height/depth. (County Grading Ordinance 202)
2. **Compaction report.** Compaction report required for fill material 12 inches or more in depth. (CBC 1803.5.8)

I. Green Building Standards Code (CALGreen) Requirements

1. **Applicability**. CalGreen residential mandatory measures shall apply to every newly constructed building or structure and within any addition or alteration increasing a building's conditioned area, volume, or size. (CalGreen 101.3, CalGreen 301.1.1)

   Exception: All residential buildings undergoing permitted alterations, additions, or improvements shall replace noncompliant plumbing fixtures with water-conserving plumbing fixtures per CalGreen 301.1.1 and CalGreen 4.303.1

I. (CALGreen) Requirements (Continued)

2. **Water conserving plumbing fixtures and fittings.** Plumbing fixtures and fittings shall comply with the following per CalGreen 4.303.1:
   - **a.** Water closets: Maximum 1.28 gallons per flush
   - **b.** Urinals: Maximum 0.5 gallons per flush
   - **c.** Single showerheads: Maximum flow rate of 2.0 gallons per minute at 80 psi
   - **d.** Multiple showerheads serving one shower: Maximum combined flow rate of 2.0 gallons per minute at 80 psi
   - **e.** Lavatory faucets: Maximum flow rate of 1.2 gallons per minute at 60 psi, minimum flow rate of 0.8 gallons per minute at 20 psi
   - **f.** Kitchen faucets: Maximum flow rate of 1.8 gallons per minute at 60 psi

   Exception: Temporary increase allowed to maximum 2.2 gallons per minute at 60 psi if faucet defaults back to maximum 1.8 gallons per minute at 60 psi
3. **Irrigation controllers.** Automatic irrigation system controllers for landscaping shall comply with the following (CalGreen 4.304.1):
   - **a.** Controllers shall be weather- or soil moisture-based controllers that automatically adjust irrigation in response to changes in plants' needs as weather conditions change.
   - **b.** Weather-based controllers without integral rain sensors or communication systems that account for local rainfall shall have a separate wired or wireless rain sensor which connects or communicates with the controller(s). Soil moisture-based controllers are not required to have rain sensor input.
4. **Joints and openings.** Openings in the building envelope separating conditioned space from unconditioned space needed to accommodate utility and other penetrations must be sealed in compliance with the *California Energy Code*. (CALGreen 4.406.1)

   Exception: Annular spaces around pipes, electric cables, conduits or other openings in plates at exterior walls shall be protected against the passage of rodents by closing such opening with cement mortar, concrete masonry or a similar method acceptable to the enforcing agency.
5. **Construction waste reduction, disposal, and recycling.** Reduce and/or salvage for reuse a minimum of 65 percent of the nonhazardous construction and demolition debris. (CALGreen 4.408.1)

   Exception: Excavated soil and land-clearing debris.

   Exception: Alternate waste reduction methods developed by working with local agencies if diversion or recycle facilities capable of compliance with this item do not exist or are not located reasonably close to the jobsite

   The County of Tulare, Department of Public Works, Construction & Demolition (C&D) Facilities Guide is online at:

   https://tularecounty.ca.gov/rma/rma-documents/public-works-documents/c-d-r-r-plan-form/
6. **Construction waste management plan.** A construction waste management plan shall be prepared and available on site during construction. Documentation demonstrating compliance with the plan shall be accessible during construction for the enforcing agency. (CALGreen 4.408.2) The plan:
   - a. Identify the construction and demolition waste materials to be diverted from disposal by recycling, reuse on the project or salvage for future use or sale
   - b. Specify if construction and demolition waste materials will be sorted on-site (source-separated) or bulk mixed (single stream)
   - c. Identify diversion facilities where the construction and demolition waste materials will be taken
   - d. Identify construction methods employed to reduce the amount of construction and demolition waste generated
   - e. Specify that the amount of construction and demolition waste materials diverted shall be calculated by weight or volume, but not by both
7. **Operation and maintenance manual.** Prior to final inspection, a manual, compact disc, web-based reference, or other acceptable media which includes all of the following shall be placed in the building (CALGreen 4.410.1):
   - **a.** Directions to owner or occupant that manual shall remain with the building throughout the life cycle of the structure.
   - **b.** Operation and maintenance instructions for the following:
     - **i.** Equipment and appliances, including water-saving devices and systems, HVAC system, photovoltaic systems, water-heating systems and other major appliances and equipment.
     - **ii.** Roof and yard drainage, including gutters and downspouts.
     - **iii.** Space conditioning systems, including condensers and air filters.
     - **iv.** Landscape irrigation systems.
     - **v.** Water reuse systems.
   - **c.** Information from local utility, water, and waste recovery providers on methods to further reduce resource consumption, including recycle programs and locations.
   - **d.** Public transportation and/or carpool options available in the area.
   - **e.** Educational material on the positive impacts of an interior relative humidity between 30-60 percent and what methods an occupant may use to maintain the relative humidity level in that range.
   - **f.** Information about water-conserving landscape and irrigation design and controllers which conserve water.
   - **g.** Instructions for maintaining gutters and downspouts and the importance of diverting water at least 5 feet away from the foundation.
   - **h.** Information on required routine maintenance measures, including, but not limited to, caulking, painting, grading around the building, etc.
   - **i.** Information about state solar energy and incentive programs available.
   - **j.** A copy of all special inspection verifications required by the enforcing agency or code.
8. **Covering of duct openings and protection of mechanical equipment during construction.** At the time of rough installation or during storage on the construction site and until final startup of the heating and cooling equipment, all duct and other related air distribution component openings shall be covered with tape, plastic, sheetmetal or other methods acceptable to the enforcing agency to reduce the amount of dust or debris which may collect in the system. (CALGreen 4.504.1)
9. **Adhesives, sealants, caulks, paints, and coatings pollutant control.** Adhesives (including carpet adhesives), sealants, caulks, paints, and coatings shall comply with VOC limits per CALGreen 4.504.2. Verification of compliance shall be provided at the request of the enforcing agency. (CALGreen 4.504.2.1)
10. **Carpet systems.** All carpet installed in the building interior shall meet the testing and product requirements of one of the following (CALGreen 4.504.3):
    - **a.** Carpet and Rug Institute's Green Label Plus Program (all carpet cushion must meet the requirements of this program).
    - **b.** California Department of Public Health Standard Practice for the testing of VOCs (Specification 01350).
    - **c.** NSF/ANSI 140 at the Gold level.
    - **d.** Scientific Certifications Systems Indoor Advantage™ Gold.
11. **Resilient flooring systems.** At least 80 percent of the floor area receiving resilient flooring shall comply with one of or more of the following (CALGreen 4.504.4):
    - a. VOC emission limits defined in the Collaborative for High Performance Schools (CHPS) High Performance Products Database
    - b. Products compliant with CHPS criteria certified under the Greenguard Children & Schools program
    - c. Certification under the Resilient Floor Covering Institute (RFCI) FloorScore program
    - d. Meet the California Department of Public Health, "Standard Method for the Testing and Evaluation of Volatile Organic Chemical Emissions from Indoor Sources Using Environmental Chambers," Version 1.1, February 2010 (also known as Specification 01350)
12. **Composite wood products.** Hardwood plywood, particleboard and medium density fiberboard composite wood products used on the interior or exterior of the building shall meet the requirements for formaldehyde as specified in ARB's Air Toxics Control Measure for Composite Wood (17 CCR 93120 et seq.) by or before the dates specified in those sections, as shown in CalGreen Table 4.504.5. The following limits are in parts per million (CALGreen 4.504.5):
    - a. Hardwood plywood veneer core 0.05
    - b. Hardwood plywood composite core 0.05
    - c. Particle board 0.09
    - d. Medium-density fiberboard (MDF) 0.11
    - e. Thin MDF (5/16 inch or less) 0.13

I. (CALGreen) Requirements (Continued)

13. **Moisture content of building materials.** Building materials with visible signs of water damage shall not be installed. Wall and floor framing shall not be enclosed when the framing members exceed 19 percent moisture content. Moisture content shall be verified in compliance with the following (CALGreen 4.505.3):
    - **a.** Moisture content shall be determined with either a probe-type or contact-type moisture meter.
    - **b.** Moisture readings shall be taken at a point 2 feet to 4 feet from the grade stamped end of each piece to be verified.
    - **c.** At least three random moisture readings shall be performed on wall and floor framing with documentation acceptable to the enforcing agency provided at the time of approval to enclose the wall and floor framing.

    Insulation products which are visibly wet or have high moisture content shall be replaced or allowed to dry prior to enclosure in wall or floor cavities. Wet-applied insulation products shall follow the manufacturers' drying recommendations prior to enclosure.
14. **B**athrooms with a bathtub and/or shower shall be mechanically ventilated per the following (CalGreen 4.506.1):
    - **a.** Fans shall be ENERGY STAR compliant and ducted to terminate outside building
    - **b.** Unless functioning as a component of a whole-house ventilation system, fans shall have humidity controls capable of adjustment - manually or automatically -- between a relative humidity range of 50% to 80%.
15. **Heating and air-conditioning system design.** Heating and air-conditioning systems shall be sized, designed, and have their equipment selected using the following methods (CALGreen 4.507.2):
    - **a.** The heat loss and heat gain is established according to ANSI/ACCA 2 Manual J, ASHRAE handbooks, or other equivalent design software or methods.
    - **b.** Duct systems are sized according to ANSI/ACCA 1 Manual D 2009, ASHRAE handbooks, or other equivalent design software or methods.
    - **c.** Select heating and cooling equipment according to ACCA 36-S Manual S or other equivalent design software or methods

TABLE R602.3(1)
FASTENER SCHEDULE FOR STRUCTURAL MEMBERS

TABLE R602.3(1)
FASTENING SCHEDULE

ITEM	DESCRIPTION OF BUILDING ELEMENTS	NUMBER AND TYPE OF FASTENER[a, b, c]	SPACING AND LOCATION
	Roof		
1	Blocking between ceiling joists or rafters to top plate	4-8d box (2½"×0.113"); or 3-8d common (2½"×0.131"); or 3-10d box (3"×0.128"); or 3-3"×0.131" nails	Toe nail
2	Ceiling joists to top plate	4-8d box (2½"×0.113"); or 3-8d common (2½"×0.131"); or 3-10d box (3"×0.128"); or 3-3"×0.131" nails	Per joist, toe nail
3	Ceiling joist not attached to parallel rafter, laps over partitions [see Sections R802.3.1, R802.3.2 and Table R802.5.1(9)]	4-10d box (3"×0.128"); or 3-16d common (3½"×0.162"); or 4-3"×0.131" nails	Face nail
4	Ceiling joist attached to parallel rafter (heel joint) [see Sections R802.3.1 and R802.3.2 and Table R802.5.1(9)]	Table R802.5.1(9)	Face nail
5	Collar tie to rafter, face nail or 1¼"×20 ga. ridge strap to rafter	4-10d box (3"×0.128"); or 3-10d common (3"×0.148"); or 4-3"×0.131" nails	Face nail each rafter
6	Rafter or roof truss to plate	3-16d box nails (3½"×0.135"); or 3-10d common nails (3"×0.148"); or 4-10d box (3"×0.128"); or 4-3"×0.131" nails	2 toe nails on one side and 1 toe nail on opposite side of each rafter or truss[i]
7	Roof rafters to ridge, valley or hip rafters or roof rafter to minimum 2" ridge beam	4-16d (3½"×0.135"); or 3-10d common (3½"×0.148"); or 4-10d box (3"×0.128"); or 4-3"×0.131" nails	Toe nail
		3-16d box 3½"×0.135"); or 2-16d common (3½"×0.162"); or 3-10d box (3"×0.128"); or 3-3"×0.131" nails	End nail
	Wall		
8	Stud to stud (not at braced wall panels)	16d common (3½"×0.162")	24" o.c. face nail
		10d box (3"×0.128"); or 3"×0.131" nails	16" o.c. face nail
9	Stud to stud and abutting studs at intersecting wall corners (at braced wall panels)	16d box (3½"×0.135"); or 3"×0.131" nails	12" o.c. face nail
		16d common (3½"×0.162")	16" o.c. face nail
10	Built-up header (2" to 2" header with ½" spacer)	16d common (3½"×0.162")	16" o.c. each edge face nail
		16d box (3½"×0.135")	12" o.c. each edge face nail
11	Continuous header to stud	5-8d box (2½"×0.113"); or 4-8d common (2½"×0.131"); or 4-10d box (3"×0.128")	Toe nail
12	Top plate to top plate	16d common (3½"×0.162")	16" o.c. face nail
		10d box (3"×0.128"); or 3"×0.131" nails	12" o.c. face nail
13	Double top plate splice for SDCs A-D2 with seismic braced wall line spacing < 25'	8-16d common (3½"×0.162"); or 12-16d box (3½"×0.135"); or 12-10d box (3"×0.128"); or 12-3"×0.131" nails	Face nail on each side of end joint (minimum 24" lap splice length each side of end joint)
	Double top plate splice SDCs D0, D1, or D2; and braced wall line spacing ≥ 25'	12-16d (3½"×0.135")	
14	Bottom plate to joist, rim joist, band joist or blocking (not at braced wall panels)	16d common (3½"×0.162")	16" o.c. face nail
		16d box (3½"×0.135"); or 3"×0.131" nails	12" o.c. face nail
15	Bottom plate to joist, rim joist, band joist or blocking (at braced wall panel)	3-16d box (3½"×0.135"); or 2-16d common (3½"×0.162"); or 4-3"×0.131" nails	3 each 16" o.c. face nail 2 each 16" o.c. face nail 4 each 16" o.c. face nail
16	Top or bottom plate to stud	4-8d box (2½"×0.113"); or 3-16d box (3½"×0.135"); or 4-8d common (2½"×0.131"); or 4-10d box (3"×0.128"); or 4-3"×0.131" nails	Toe nail
		3-16d box (3½"×0.135"); or 2-16d common (3½"×0.162"); or 3-10d box (3"×0.128"); or 3-3"×0.131" nails	End nail
17	Top plates, laps at corners and intersections	3-10d box (3"×0.128"); or 2-16d common (3½"×0.162"); or 3-3"×0.131" nails	Face nail
18	1" brace to each stud and plate	3-8d box (2½"×0.113"); or 2-8d common (2½"×0.131"); or 2-10d box (3"×0.128"); or 2 staples 1¾"	Face nail
19	1"×6" sheathing to each bearing	3-8d box (2½"×0.113"); or 2-8d common (2½"×0.131"); or 2-10d box (3"×0.128"); or 2 staples, 1" crown, 16 ga., 1¾" long	Face nail
20	1"×8" and wider sheathing to each bearing	3-8d box (2½"×0.113"); or 3-8d common (2½"×0.131"); or 3-10d box (3"×0.128"); or 3 staples, 1" crown, 16 ga., 1¾" long	Face nail
		Wider than 1"×8" 4-8d box (2½"×0.113"); or 3-8d common (2½"×0.131"); or 3-10d box (3"×0.128"); or 4 staples, 1" crown, 16 ga., 1¾" long	
	Floor		
21	Joist to sill, top plate or girder	4-8d box (2½"×0.113"); or 3-8d common (2½"×0.131"); or 3-10d box (3"×0.128"); or 3-3"×0.131" nails	Toe nail
22	Rim joist, band joist or blocking to sill or top plate (roof applications also)	8d box (2½"×0.113")	4" o.c. toe nail
		8d common (2½"×0.131"); or 10d box (3"×0.128"); or 3"×0.131" nails	6" o.c. toe nail
23	1"×6" subfloor or less to each joist	3-8d box (2½"×0.113"); or 2-8d common (2½"×0.131"); or 3-10d box (3"×0.128"); or 2 staples, 1" crown, 16 ga., 1¾" long	Face nail

ITEM	DESCRIPTION OF BUILDING ELEMENTS	NUMBER AND TYPE OF FASTENER[a, b, c]	SPACING AND LOCATION
	Floor		
24	2" subfloor to joist or girder	3-16d box (3½"×0.135"); or 2-16d common (3½"×0.162")	Blind and face nail
25	2" planks (plank & beam—floor & roof)	3-16d box (3½"×0.135"); or 2-16d common (3½"×0.162")	At each bearing, face nail
26	Band or rim joist to joist	3-16d common (3½"×0.162") 4-10 box (3"×0.128"), or 4-3"×0.131" nails; or 4-3"×14 ga. staples, 7/16" crown	End nail
27	Built-up girders and beams, 2-inch lumber layers	20d common (4"×0.192"); or	Nail each layer as follows: 32" o.c. at top and bottom and staggered.
		10d box (3"×0.128"); or 3"×0.131" nails	24" o.c. face nail at top and bottom staggered on opposite sides
		And: 2-20d common (4"×0.192"); or 3-10d box (3"×0.128"); or 3-3"×0.131" nails	Face nail at ends and at each splice
28	Ledger strip supporting joists or rafters	4-16d box (3½"×0.135"); or 3-16d common (3½"×0.162"); or 4-10d box (3"×0.128"); or 4-3"×0.131" nails	At each joist or rafter, face nail
29	Bridging to joist	2-10d (3"×0.128")	Each end, toe nail

ITEM	DESCRIPTION OF BUILDING ELEMENTS	NUMBER AND TYPE OF FASTENER[a, b, c]	SPACING OF FASTENERS: Edges (inches)[h]	SPACING OF FASTENERS: Intermediate supports[c, e] (inches)
	Wood structural panels, subfloor, roof and interior wall sheathing to framing and particleboard wall sheathing to framing (See Table R602.3(3) for wood structural panel exterior wall sheathing to wall framing)			
30	3/8" – 1/2"	6d common (2"×0.113") nail (subfloor, wall) 8d common (2½"×0.131") nail (roof)	6	12[f]
31	19/32" – 1"	8d common nail (2½"×0.131")	6	12[f]
32	1⅛" – 1¼"	10d common (3"×0.148") nail; or 8d (2½"×0.131") deformed nail	6	12
	Other wall sheathing[g]			
33	1/2" structural cellulosic fiberboard sheathing	1½" galvanized roofing nail, 7/16" head diameter, or 1" crown staple 16 ga., 1¼" long	3	6
34	25/32" structural cellulosic fiberboard sheathing	1¾" galvanized roofing nail, 7/16" head diameter, or 1" crown staple 16 ga., 1½" long	3	6
35	1/2" gypsum sheathing[d]	1½" galvanized roofing nail; staple galvanized, 1½" long; 1¼" screws, Type W or S	7	7
36	5/8" gypsum sheathing[d]	1¾" galvanized roofing nail; staple galvanized, 1⅝" long; 1⅝" screws, Type W or S	7	7
	Wood structural panels, combination subfloor underlayment to framing			
37	3/4" and less	6d deformed (2"×0.120") nail; or 8d common (2½"×0.131") nail	6	12
38	7/8" – 1"	8d common (2½"×0.131") nail; or 8d deformed (2½"×0.120") nail	6	12
39	1⅛" – 1¼"	10d common (3"×0.148") nail; or 8d deformed (2½"×0.120") nail	6	12

TABLE R602.3(1)—continued
FASTENING SCHEDULE

a. Nails are smooth-common, box or deformed shanks except where otherwise stated. Nails used for framing and sheathing connections shall have minimum average bending yield strengths as shown: 80 ksi for shank diameter of 0.192 inch (20d common nail), 90 ksi for shank diameters larger than 0.142 inch but not larger than 0.177 inch, and 100 ksi for shank diameters of 0.142 inch or less.
b. Staples are 16 gage wire and have a minimum 7/16-inch on diameter crown width.
c. Nails shall be spaced at not more than 6 inches on center at all supports where spans are 48 inches or greater.
d. Four-foot by 8-foot or 4-foot by 9-foot panels shall be applied vertically.
e. Spacing of fasteners not included in this table shall be based on Table R602.3(2).
f. Where the ultimate design wind speed is 130 mph or less, nails for attaching wood structural panel roof sheathing to gable end wall framing shall be spaced 6 inches on center. Where the ultimate design wind speed is greater than 130 mph, nails for attaching panel roof sheathing to intermediate supports shall be spaced 6 inches on center for minimum 48-inch distance from ridges, eaves and gable end walls; and 4 inches on center to gable end wall framing.
g. Gypsum sheathing shall conform to ASTM C1396 and shall be installed in accordance with GA 253. Fiberboard sheathing shall conform to ASTM C208.
h. Spacing of fasteners on floor sheathing panel edges applies to panel edges supported by framing members and required blocking and at floor perimeters only. Spacing of fasteners on roof sheathing panel edges applies to panel edges supported by framing members and required blocking. Blocking of roof or floor sheathing panel edges perpendicular to the framing members need not be provided except as required by other provisions of this code. Floor perimeter shall be supported by framing members or solid blocking.
i. Where a rafter is fastened to an adjacent parallel ceiling joist in accordance with this schedule, provide two toe nails on one side of the rafter and toe nails from the ceiling joist to top plate in accordance with this schedule. The toe nail on the opposite side of the rafter shall not be required.

THESE ARE MINIMUM REQUIREMENTS AND SHALL NOT SUPERSEDE MORE RESTRICTIVE SPECIFICATIONS ON THE PLANS OR AS REQUIRED BY APPLICABLE CODE.

BUILDING RECORD ID:

OWNER OR CONTRACTOR SIGNATURE:

County of Tulare, Economic Development
MINIMUM CONSTRUCTION SPECIFICATIONS
BUILDING DIVISION

Sheet Number

CS-1

NO CHANGES ALLOWED TO THIS DESIGN